WIRING DIAGRAM

Light Duty Commercial
Gas Fired Power Vent Model
UG75

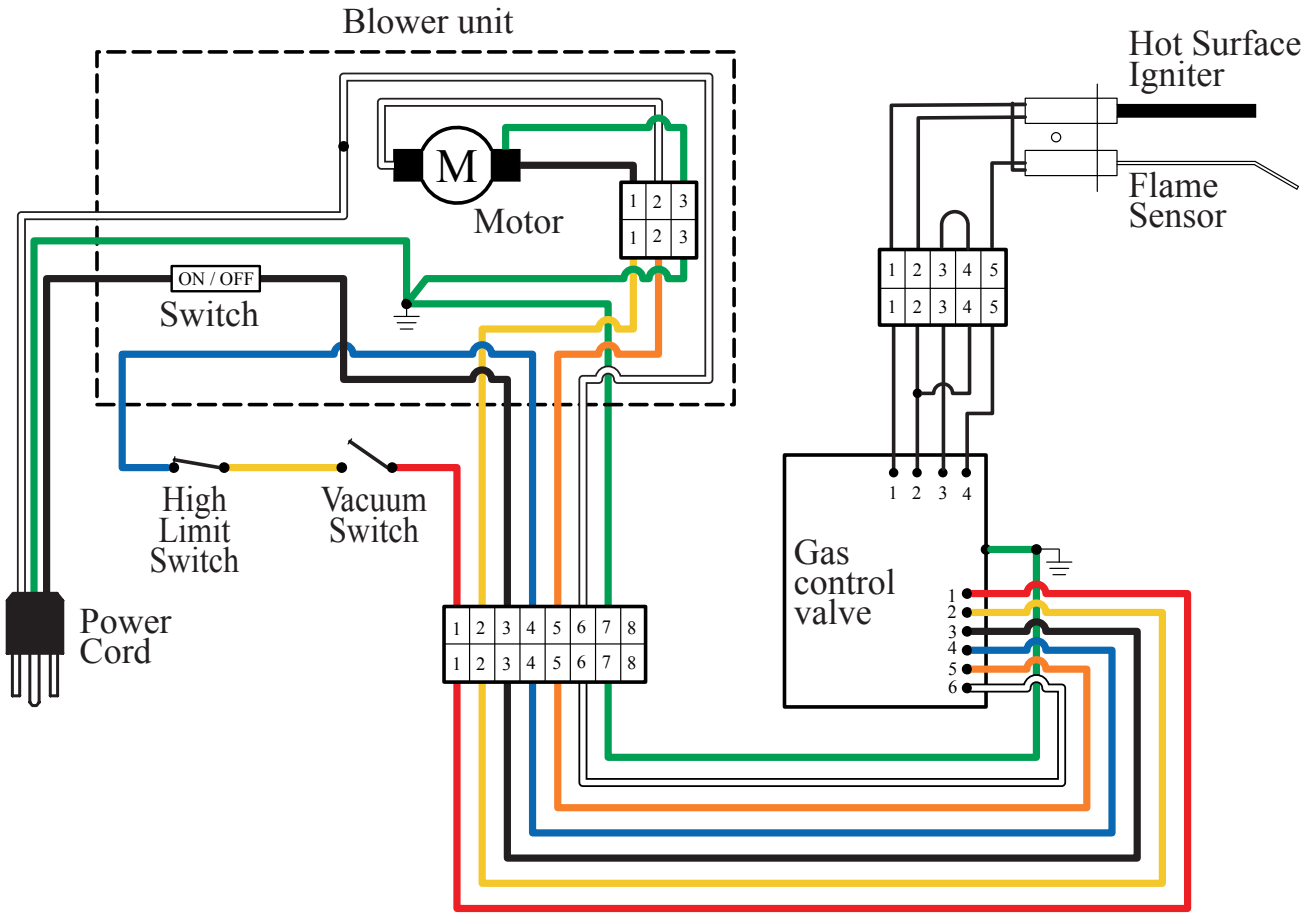

In accordance with our company policy of ongoing product improvement, Giant Factories inc.reserves the right to make changes without notice.

giantinc.com

40 Lesage Avenue Montreal-East (Quebec) CANADA H1B 5H3 • **Telephone : (514) 645-8893** • Fax : (514) 640-0969

December 2008